POWER DETECTION DESIGN SIMULATIONS

DATE: 24/12/14 REV: 0 PAGE: 1/1
BY: F1FRV@SFR.FR
DOC N°: AMATEUR RADIO

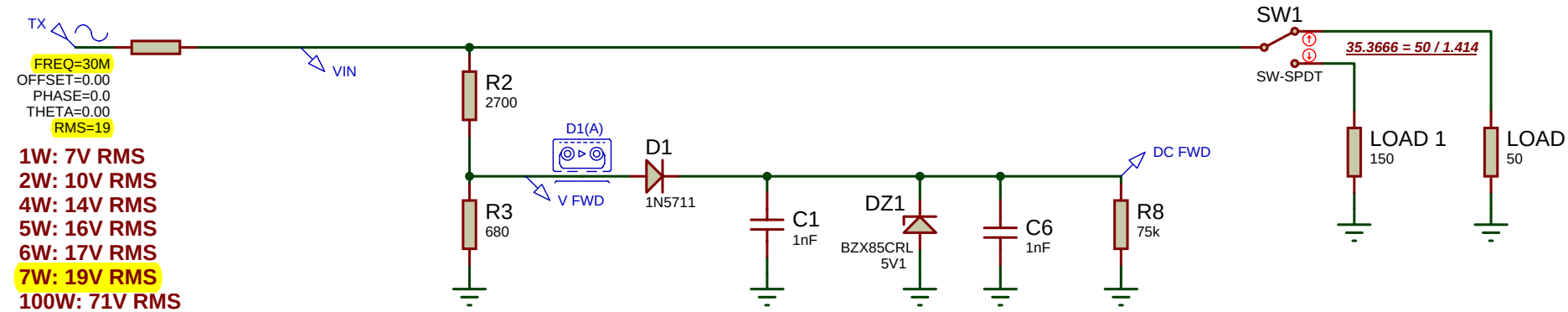
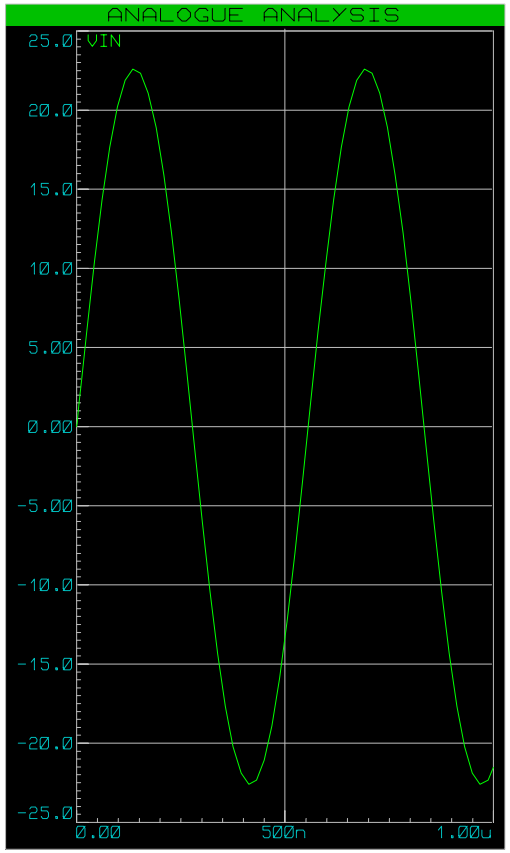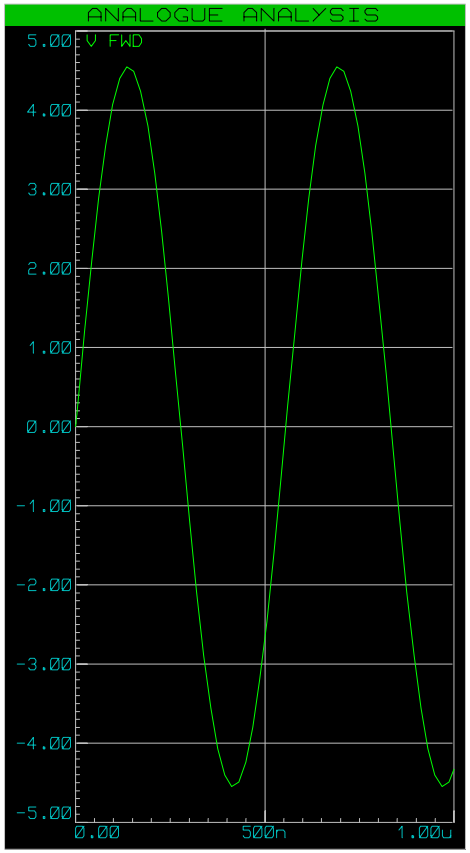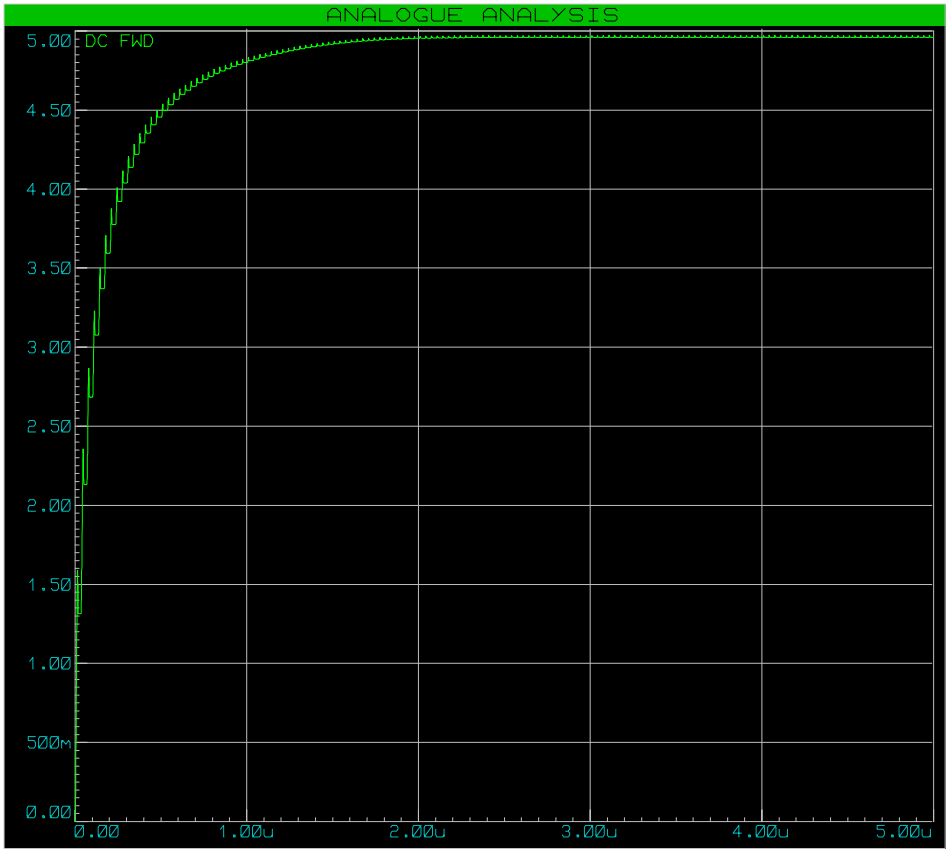
1W: 7V RMS
2W: 10V RMS
4W: 14V RMS
5W: 16V RMS
6W: 17V RMS
7W: 19V RMS
100W: 71V RMS