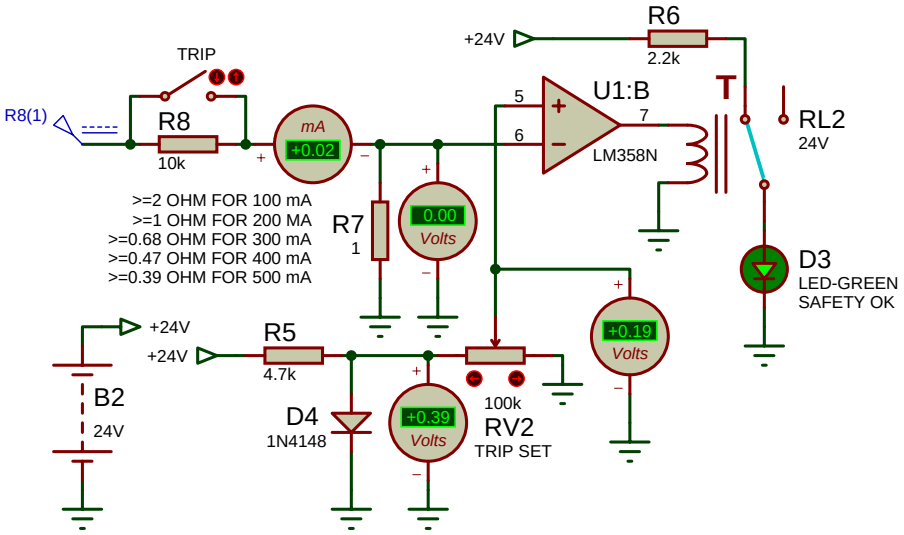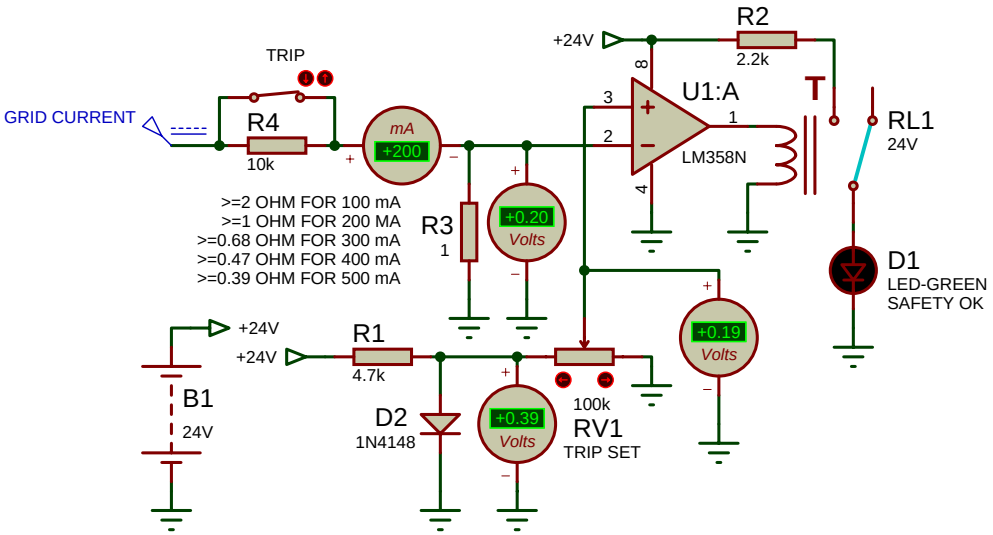TRIODE AMPLIFIER DESIGN GRID TRIP SIMULATION	DOC N°: AMATEUR RADIO BY: F1FRV@SFR.FR DATE: 21/11/10 REV: 0 PAGE: 1/1