PEAK POWER BOARD FOR ALL BIRD 43 WATTMETERS ADAPTABLE TO OTHER POWER METERS	DATE: 05/2021 REV: 4B BY: f1frv@sfr.fr DOC Nr: http://f1frv.free.fr/

THIS CIRCUIT USES SPLIT POWER SUPPLY OF OP AMP, TO ALLOWS FOR PRECISE 0 OFFSET ADJUSTMENT.

FOR USE INTO OTHERS THAN BIRD43 WATTMETER
4 PCB FIXATION HOLES DIA 4.5 mm (0.177")
IN THIS CASE, TERMINAL J9 IS NOT USED.
FOR WIRING, USE 4 x 2 POLES SCREWED TERMINAL BLOCKS

PCB CAN BE MOUNTED DIRECTLY ON BIRD METER
WITH 1.375" (~ 35 mm) BETWEEN SCREWS,
OR 1.5" (38.1 mm) BETWEEN SCREWS.
BIRD 43 METER HOLES DIA. 0.177" / 4.5 mm
USE 2 x BRASS MALE/FEMALE SPACERS
Keystone 7220 #8-32 LENGTH 9,52 mm
Mouser REFERENCE : 534-7220

PCB DIMENSIONS 2.3" x 2.75" 82 HOLES
DIMENSIONS 58.5 x 70 mm 82 TROUS

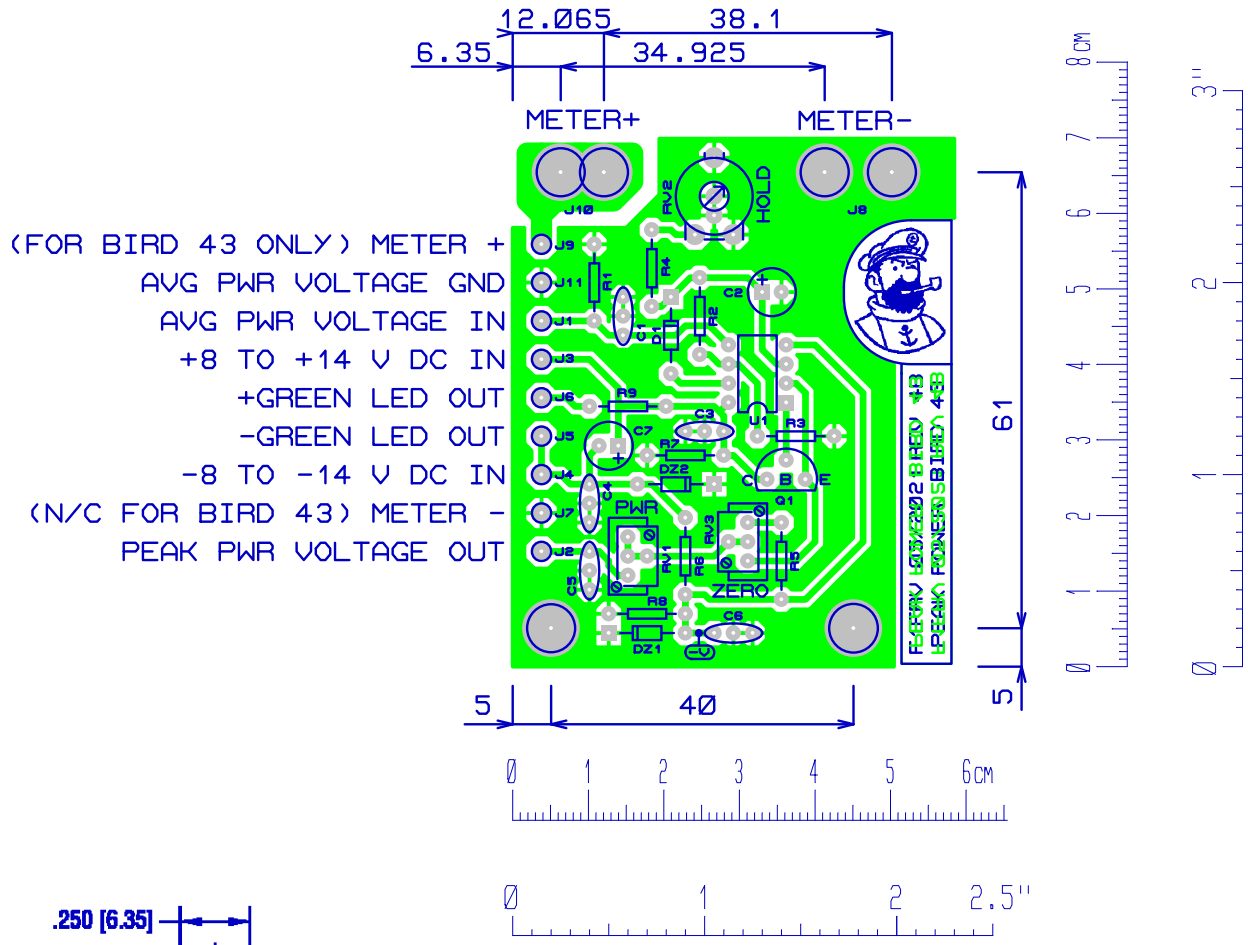

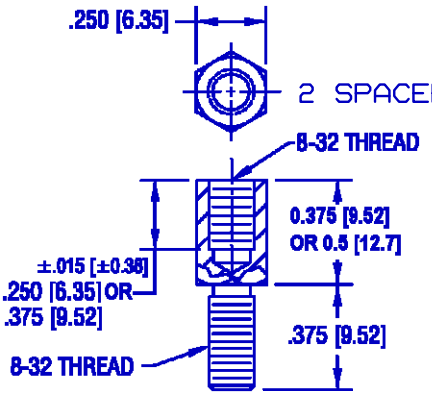

2 SPACERS ALLOWS FOR USE OF THE 2 SPARE PLUGS
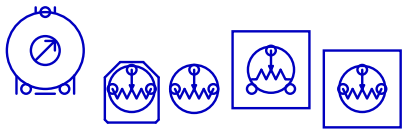
FOR RV2 , ONE TURN
ALL THESE TYPES OF VARIABLE
RESISTORS CAN BE USED