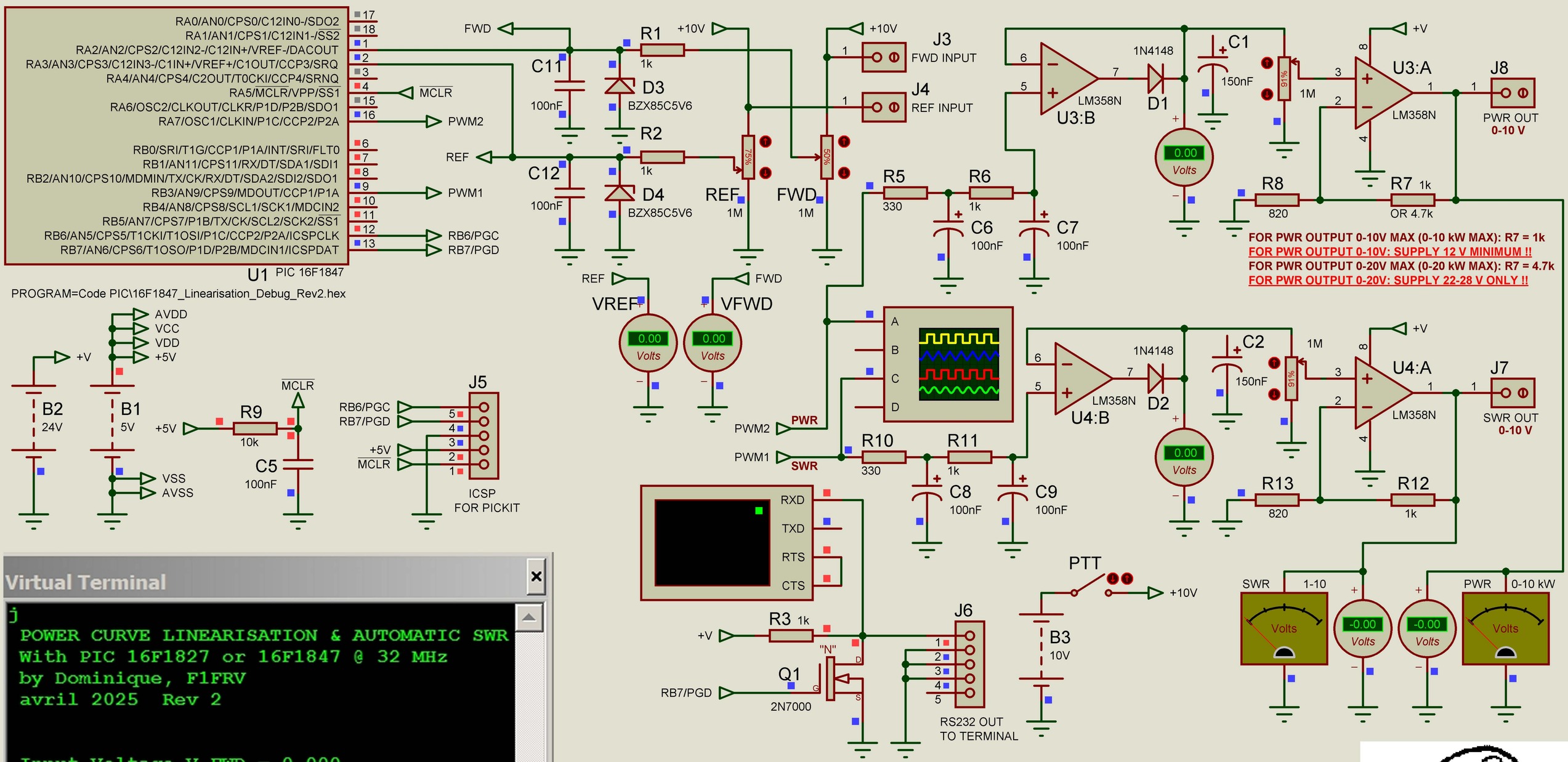

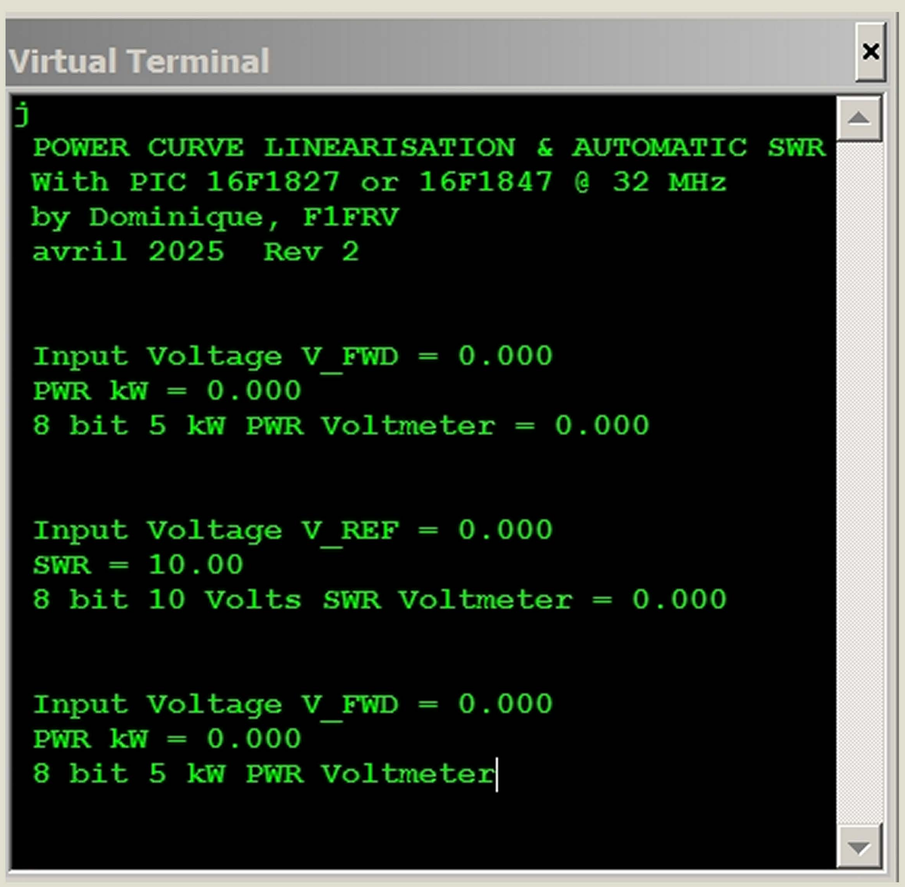

POWER CURVE LINEARISATION & AUTOMATIC SWR SIMULATION	DATE: 15/04/25	REV: 2	PAGE: 1/1
	BY: f1frv@sfr.fr		
	DOC N°: AMATEUR RADIO		

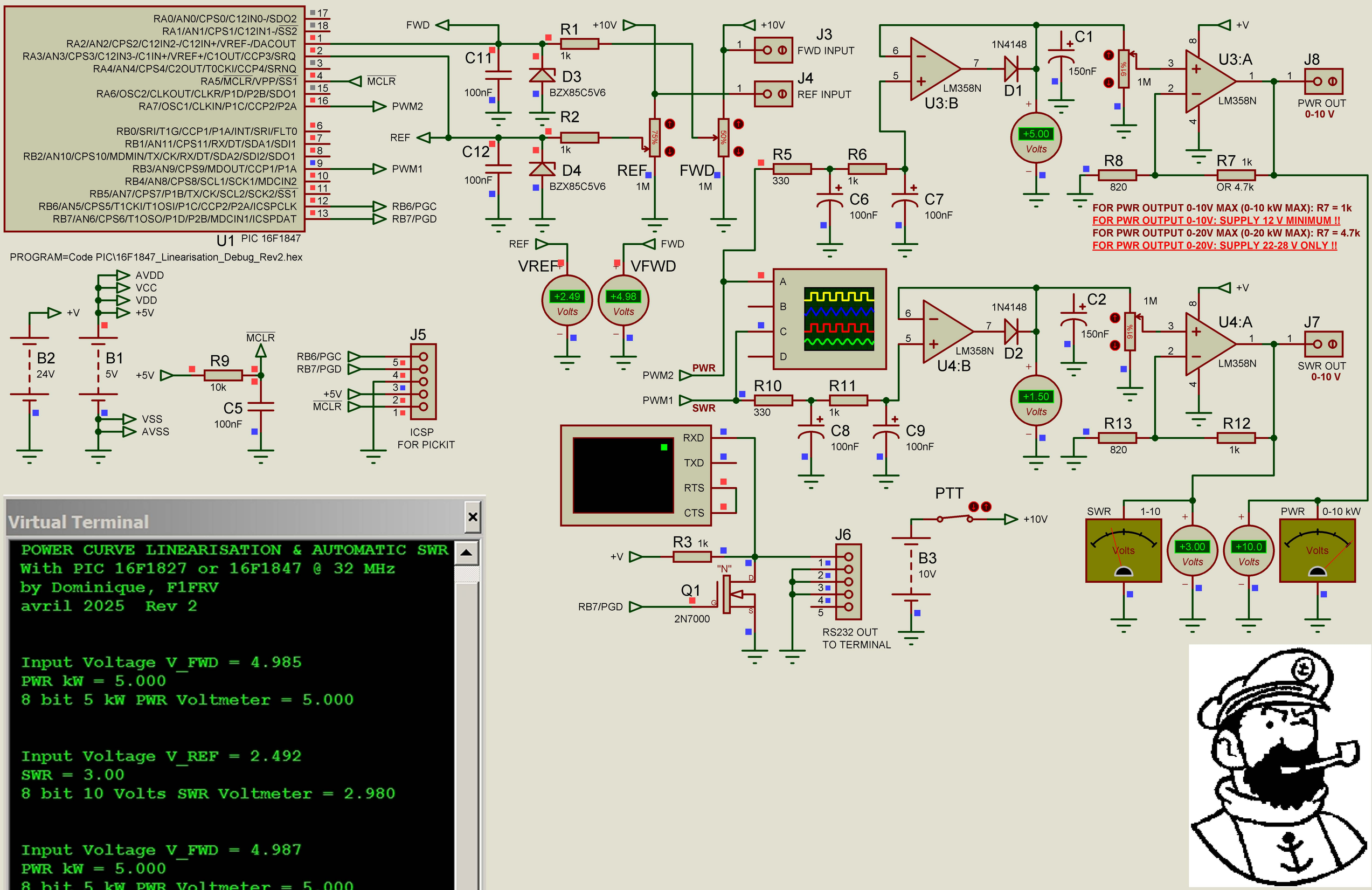

Virtual Terminal

```
POWER CURVE LINEARISATION & AUTOMATIC SWR
With PIC 16F1827 or 16F1847 @ 32 MHz
by Dominique, F1FRV
avril 2025  Rev 2

Input Voltage V_FWD = 4.985
PWR kW = 5.000
8 bit 5 kW PWR Voltmeter = 5.000

Input Voltage V_REF = 2.492
SWR = 3.00
8 bit 10 Volts SWR Voltmeter = 2.980

Input Voltage V_FWD = 4.987
PWR kW = 5.000
8 bit 5 kW PWR Voltmeter = 5.000
```

POWER CURVE LINEARISATION & AUTOMATIC SWR SIMULATION

DATE: 15/04/25 REV: 2 PAGE: 1/1
BY: f1frv@sfr.fr
DOC N°: AMATEUR RADIO