TRX 50 - 650 MHZ SYNTHETISED
RX SA 636 + VCO RX

DATE: 09-Jun-01 REV: 0 PAGE: 1/6
BY: F1FRV @ F6KBF.FRPA.FRA.EU
DOC N°: DATA BW 25-650 kHz

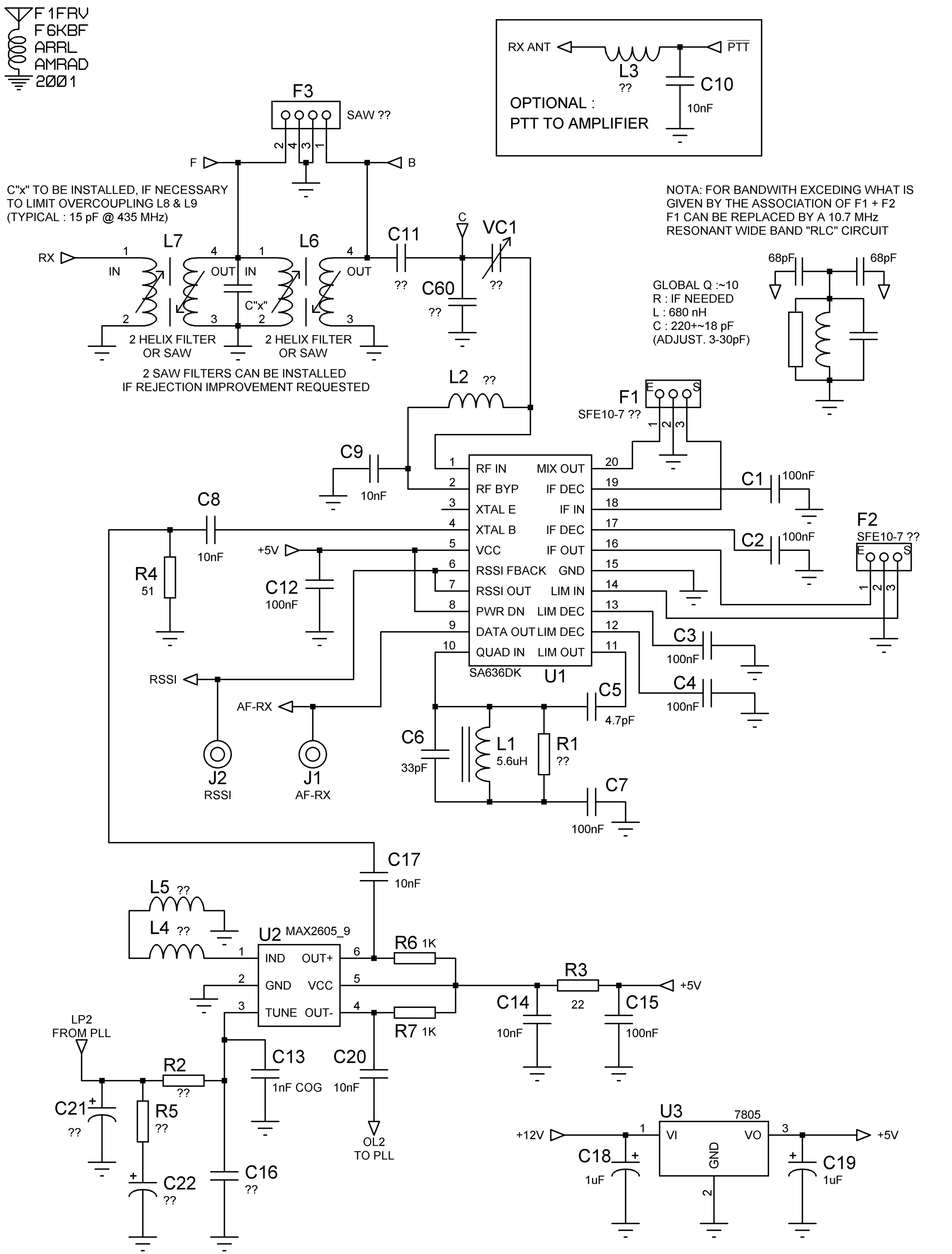

TRX 50 - 650 MHZ SYNTHETISED
PLL + PIC + VCXO

DATE: 09-Jun-01 REV: 0 PAGE: 2/6
BY: F1FRV @ F6KBF.FRPA.FRA.EU
DOC N°: DATA BW 25-650 kHz

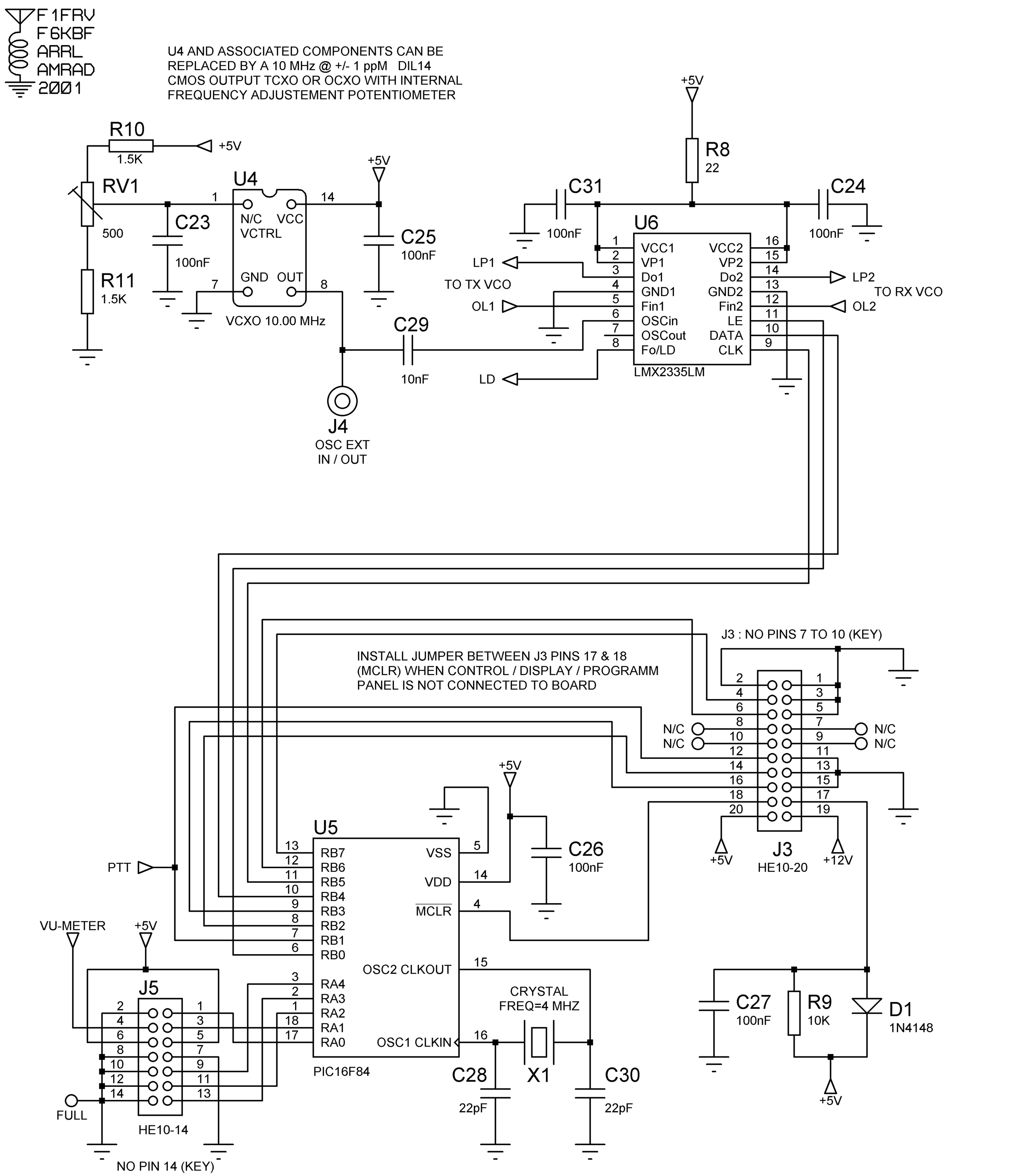

TRX 50 - 650 MHZ SYNTHETISED
GAS FET RX PREAMPLIFIER

DATE: 09-Jun-01 REV: 0 PAGE: 3/6
BY: F1FRV @ F6KBF.FRPA.FRA.EU
DOC N°: DATA BW 25-650 kHz

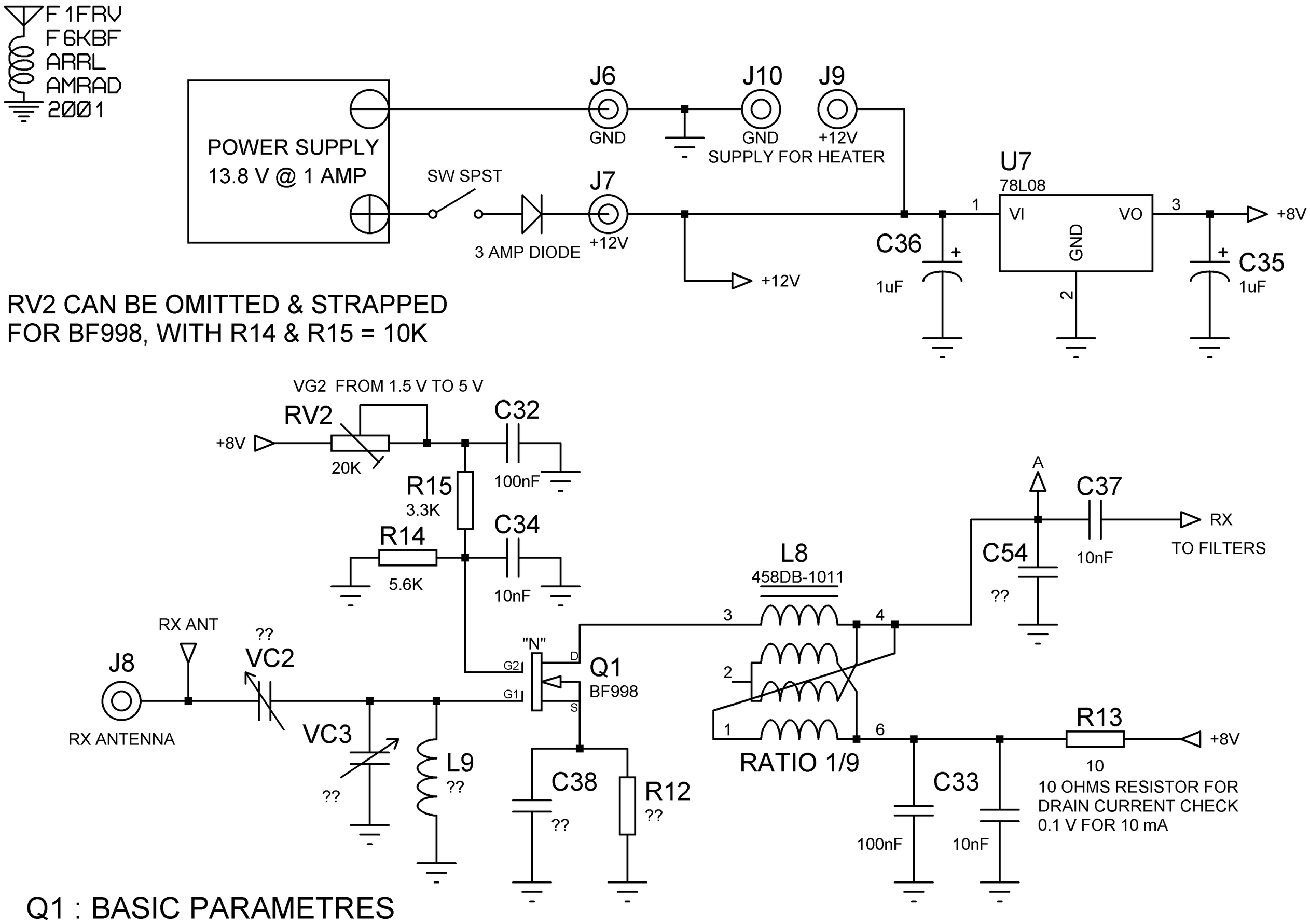

Q1 : BASIC PARAMETRES

@ Vd_s = 8 V
@ Vg2 _ s = 4 V
@ Vg1 _ s = 0 V
I drain = ~ 10mA
Nf = ~0.6 dB @ 200 MHz
Gain = ~28 dB @ 200 MHz
Nf = ~0.8 dB @ 450 MHz
Gain = ~25 dB @ 450 MHz

C38 & R12 ARE NOT USED WITH BF998
WITH BF998, SOURCE IS GROUNDED
C38 & R12 CAN BE USED FOR OTHER
TRANSISTORS OR PARAMETRES

FOR SAW FILTERS 150 OR 200 OHMS
CUT STRIP BETWEEN L8 PINS 1&4
FOR RATIO 1/4 INSTEAD OF 1/9

L8 : DOUBLE BALANCED MIXER TRANSFORMER
BW @ -3 dB : 10 - 1300 MHz

" * " PREFERRED MODELS

NEOSID SMD REFERENCE : SM-T7e 00553400
* NEOSID SMD REFERENCE : SM-T7e 00553401
TOKO SMD REFERENCE : B5F 458DB-1003
TOKO SMD REFERENCE : B5F 458DB-1008
* TOKO SMD REFERENCE : B5F 458DB-1011
TOKO SMD REFERENCE : B5FL 616DB-1004
* TOKO SMD REFERENCE : B5FL 616DB-1007
TOKO SMD REFERENCE : B5FL 616DB-1008
TOKO LEADED REFERENCE : B7T 456DB-1005
TOKO LEADED REFERENCE : B7T 456DB-1006
* TOKO LEADED REFERENCE : B7T 456DB-1007

ALL SMD INDUCTORS IN 1210 : EPCOS TYPE SIMID 1210-100 , COILCRAFT TYPE 1008 CS , TOKO TYPE FSLx 2520 , OR EQUIVALENT

ALL SMD INDUCTORS IN 0805 : COILCRAFT TYPE 0805 CS , TOKO TYPE LL 2012 FH , PTL 2012 F , OR EQUIVALENT

TRX 50 - 650 MHZ SYNTHETISED
TX VCO + TX AMPLIFIERS

DATE: 09-Jun-01 REV: 0 PAGE: 4/6
BY: F1FRV @ F6KBF.FRPA.FRA.EU
DOC N°: DATA BW 25-650 kHz

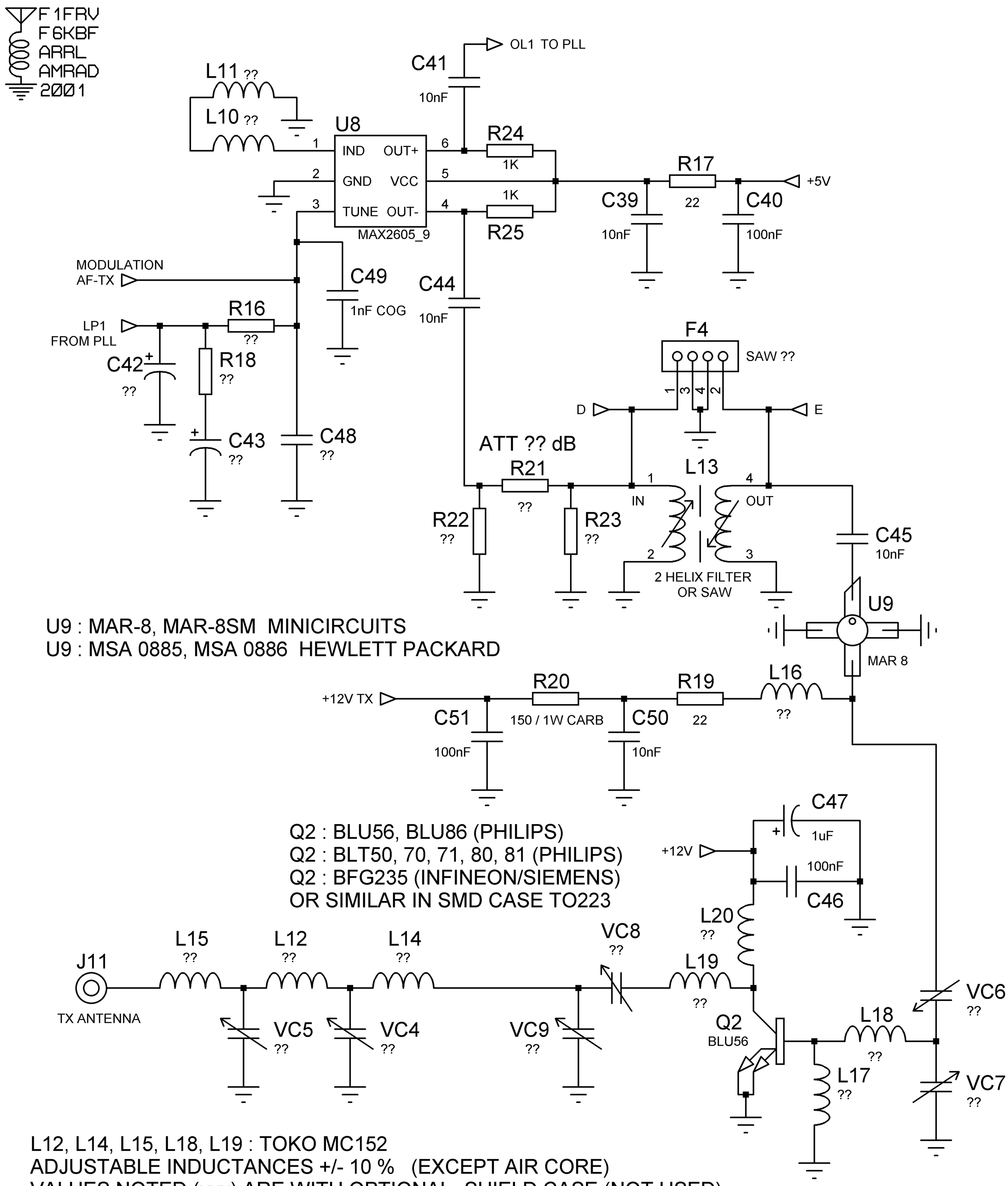

L12, L14, L15, L18, L19 : TOKO MC152
ADJUSTABLE INDUCTANCES +/- 10 % (EXCEPT AIR CORE)
VALUES NOTED (xxx) ARE WITH OPTIONAL SHIELD CASE (NOT USED)

		FERRITE CORE				AIR CORE				BRASS CORE			
TURNS	COLOR	IND (nH)		Q@100 MHZ		IND (nH)		Q@100 MHZ		IND (nH)		Q@100 MHZ	
1 1/2	WHITE	32	(28)	90	(63)	29	(28)	85	(60)	29	(27)	52	(58)
2 1/2	VIOLET	47	(39)	110	(77)	41	(37)	100	(70)	38	(34)	63	(55)
3 1/2	ORANGE	68	(53)	110	(76)	56	(48)	105	(80)	48	(43)	56	(54)
4 1/2	YELLOW	90	(67)	115	(81)	73	(59)	105	(80)	57	(52)	50	(52)
5 1/2	WHITE	112	(79)	120	(86)	91	(71)	120	(86)	72	(61)	50	(49)
6 1/2	BLUE	142	(94)	120	(80)	111	(84)	120	(83)	84	(68)	50	(47)

TRX 50 - 650 MHZ SYNTHETISED
MODEM INTERFACE / SWITCHINGS

DATE: 09-Jun-01 REV: 0 PAGE: 5/6
BY: F1FRV @ F6KBF.FRPA.FRA.EU
DOC N°: DATA BW 25-650 kHz

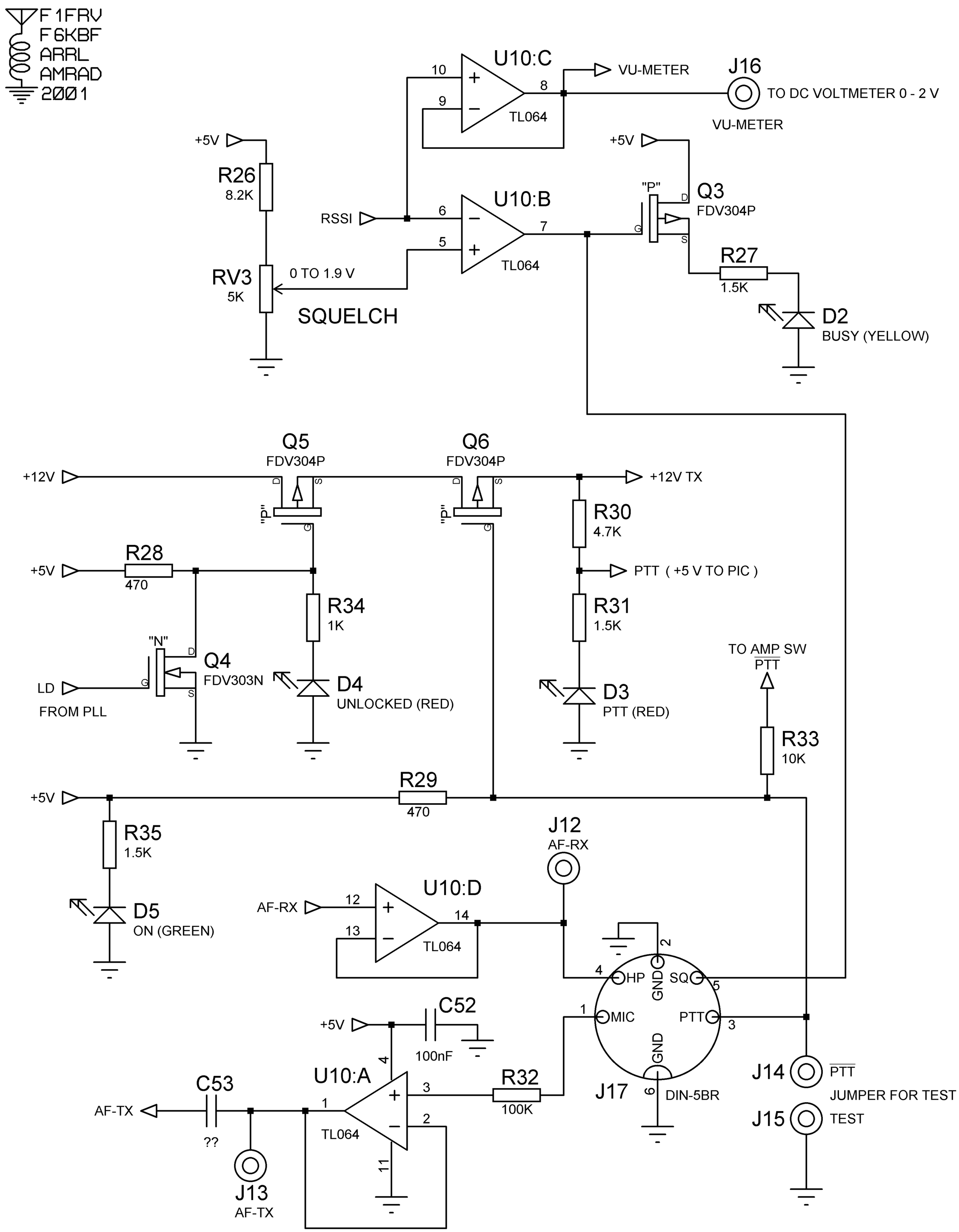

NOTA :

U10 CAN BE ANY RAIL TO RAIL AMP. OP. WITH UNITY GAIN BANDWIDTH 1 MHz

U10 : TLO64, TLO74, TLO84, MC33174 etc..

U10 ACTS AS LOW PASS FILTER FOR RESIDUAL 10.7 MHz ON DATA

ALL COMPONENTS VALUE NOTED : ?? ARE TO BE DEFINED REGARDING FREQUENCY OF USE

ALL LEDS ARE LOW CURRENT TYPE (2 mA)

TRX 50 - 650 MHZ SYNTHETISED
RX & TX SPECIAL FILTERS

F1FRV
F6KBF
ARRL
AMRAD
2001

FILTERS TO BE USED WHEN SAW OR 2 HELIX FILTERS ARE NOT AVAILABLE

NOTA : FOR USE OF SPECIAL RX FILTERS, ONE PCB STRIP MUST BE GROUNDED

RX SPECIAL BANDPASS FILTER 4 FILTERS 1 HELIX NEOSID BV 005?????

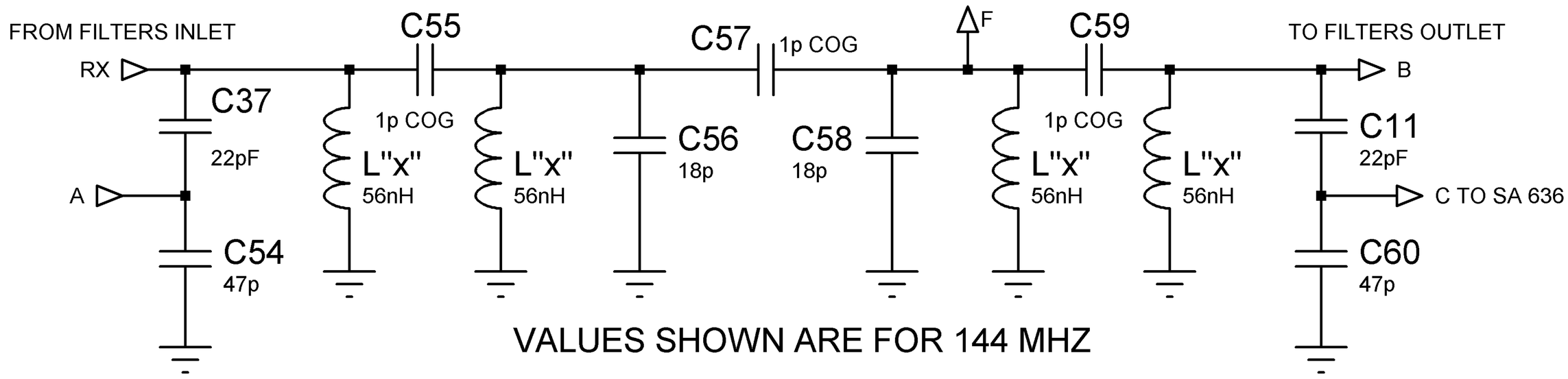

TX SPECIAL LOW PASS FILTER 2 FILTERS 1 HELIX NEOSID BV 005?????

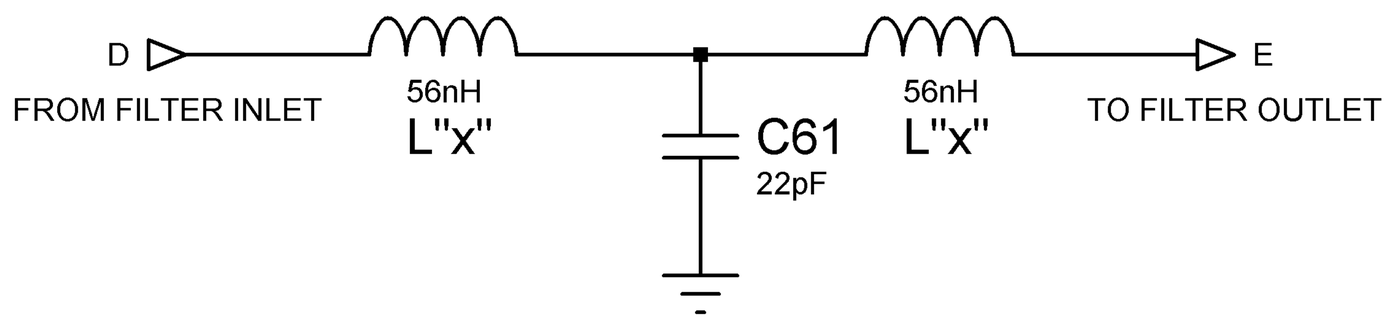

NEOSID AVAILABLE PACK OF 2 HELICAL SINGLE COILS (USE C56 & C58 ONLY)

IND. (nH)	FREQ (MHz)	TURNS	SCREW	Q @ FREQ	REFERENCE	GERMAN RETAILERS
53-70	120-160	4 1/2	F100b	150 @ 120	BV 00511836	GIGATECH & EISCH

NEOSID AVAILABLE HELICAL SINGLE COILS

IND. (nH)	FREQ (MHz)	TURNS	SCREW	Q @ FREQ	REFERENCE	GERMAN RETAILERS
19-22	100-500	2 1/2	BRASS	150 @ 150	BV 00514831	GIGATECH
30-37	100-500	3 1/2	BRASS	150 @ 150	BV 00511631	GIGATECH
53-70	50-200	4 1/2	F100b	150 @ 120	BV 00511830	GIGATECH
67-76	100-300	6 1/2	BRASS	150 @ 100	BV 00514630	GIGATECH & EISCH
88-115	50-200	6 1/2	F100b	120 @ 100	BV 00514634	GIGATECH & EISCH
92-100	100-300	8 1/2	BRASS	130 @ 100	BV 00514932	
160-190	50-200	9 1/2	F100b	140 @ 80	BV 00511732	

BAND / COMP	50-54	70-76	110.6	144-148	219-225	254.4	315			420-450
C11 C37				22 pF						
C54 C60				47pF						
C55 C57 C59				1pF						
C56 C58				18 pF						
C61				22pF						
L "X"				56nH						
F3			SAW			SAW	SAW			
F4			SAW			SAW	SAW			
L6 L7 L13										2 HELIX